841

Features

- ☐ Heavy duty 30A 240VAC, 25A 240VAC power type.
- ☐ AC & DC coils are both available.
- ☐ PCB terminals and quick terminal types.
- ☐ Optional for special large contact gap 3.0mm version. SPNO-ST & DPNO-ST contact configuration.
- ☐ Comply with RoHS-Directive 2002/95/EC.

Type List

Terminal style	Contact form	Enlarge spacing type	Designation			
			Dust cover	Flux tight	Flanged cover	Sealed type washable
S (Quick terminal)	1A (SPDM)	-------	841-S-1A-D	841-S-1A-C	841-S-1A-C1	841-S-1A-S
		H	841-S-1A-D-H	841-S-1A-C-H	841-S-1A-C1-H	841-S-1A-S-H
	2A (DPDM)	-------	841-S-2A-D	841-S-2A-C	841-S-2A-C1	841-S-2A-S
		H	841-S-2A-D-H	841-S-2A-C-H	841-S-2A-C1-H	841-S-2A-S-H
P (PCB terminal)	1A (SPDM)	-------	841-P-1A-D	841-P-1A-C	——	841-P-1A-S
		H	841-P-1A-D-H	841-P-1A-C-H	——	841-P-1A-S-H
	2A (DPDM)	-------	841-P-2A-D	841-P-2A-C	——	841-P-2A-S
		H	841-P-2A-D-H	841-P-2A-C-H	——	841-P-2A-S-H

Ordering Information

841	-	S	-	1A	-	F	-	C	-	H
1		2		3		4		5		6

1. 841 -- Basic series designation
2. S -- Quick terminal
   P -- PCB terminals
3. 1A -- Form A, single-pole, double-make (SPDM)
   2A -- Form A, double-pole, double-make (DPDM)
4. Blank -- Standard type
   F -- Class F
5. C -- Flux tight
   D -- Dust cover
   V -- Sealed type
   S -- Sealed type washable
   C1 -- Flanged cover
   D1 -- Dust cover with flange
   S1 -- Plastic sealed washable with flange
6. Blank -- Standard type
   H -- Enlarged insulation spacing type

Contact Rating

Load type	1A (SPDM)	2A (DPDM)
Rated load (Resistive)	30A 220VAC	25A 220VAC
Max. Switching Current	30A	25A
Max. Switching Voltage	277VAC	277VAC
Max. Switching Capacity	6600VA	5500VA

Coil Rating (DC)

Rated voltage (V)	Rated current ±10 % at 23° C (mA)	Coil resistance ±10 % at 23° C (Ω)	Max. continuous voltage at 70° C	Pick up voltage(Max) at 23° C	Drop out voltage(Min) at 23° C	Power consumption at rated voltage
3	638	4.7	160 % of rated voltage	75 % of rated voltage	10 % of rated voltage	approx. 1.92W
6	319	18.8				
12	160	75				
24	80	300				
48/50	40/41.6	1200				
100	19.2	5200				
110	17.4	6300				
200	9.5	21000				

Coil Rating (AC)

Rated voltage (V)	Rated current +15/-20% at 23° C (mA)	Coil resistance +15/-20% at 23° C (Ω)	Max. continuous voltage at 70° C	Pick up voltage(Max) at 23° C	Drop out voltage(Min) at 23° C	Power consumption at rated voltage
6	275	15	160 % of rated voltage	80 % of rated voltage	10 % of rated voltage	approx. 1.7VA ~ 2.7VA
12	138	75				
24	74	300				
48/50	39/40	1,200				
100/120	18.7/22.1	5,200				
200/240	9.1/10.8	21,000				

Specification

Contact material	AgSnO alloy	
Contact resistance (1)	100 mΩ Max.	
Operate time (1)	30 ms Max.	
Release time (1)	30 ms Max.	
Insulation resistance (1)	1000 MΩ Min. (DC 500V)	
Dielectric strength (1)	Between open contact	: AC 2000V , 50/60Hz 1 min.
	Between contact and coil	: AC 4000V , 50/60Hz 1 min.
	Between contact circuits	: AC 2000V , 50/60Hz 1 min.
Vibration resistance	Operating extremes	10～55Hz , amplitude 1.5 mm
	Damage limits	10～55Hz , amplitude 1.5 mm
Shock resistance	Operating extremes	10G
	Damage limits	100G

841

Life expectancy	Mechanical	5,000,000 operations (frequency 18,000 operations/hr)
	Electrical	100,000 operations (frequency 900 operations/hr)
Operating ambient temperature	-55～+70°C (no freezing)	
Weight	Approx. 90 g	

Note： (1) initial value.

Safety Approval

Certified	UL / CUL	TUV
File No.	E88991	R9653713

Safety Approval Rating

UL / CUL		TUV	
1A	2A	1A	2A
30A 277VAC TV-10 10A 277VAC 1.5HP 20FLA, 125VAC 3HP 14.1FLA, 277VAC	25A 277VAC TV-10 10A 277VAC 1HP 16FLA, 125VAC 2HP 9.96FLA, 277VAC	30A 250VAC 25A 250VAC cosϕ0.4 30A 125VAC cosϕ0.4	25A 250VAC 25A 250VAC cosϕ0.4

Outline Dimensions

◆841-S-2A (C,D,V,S)

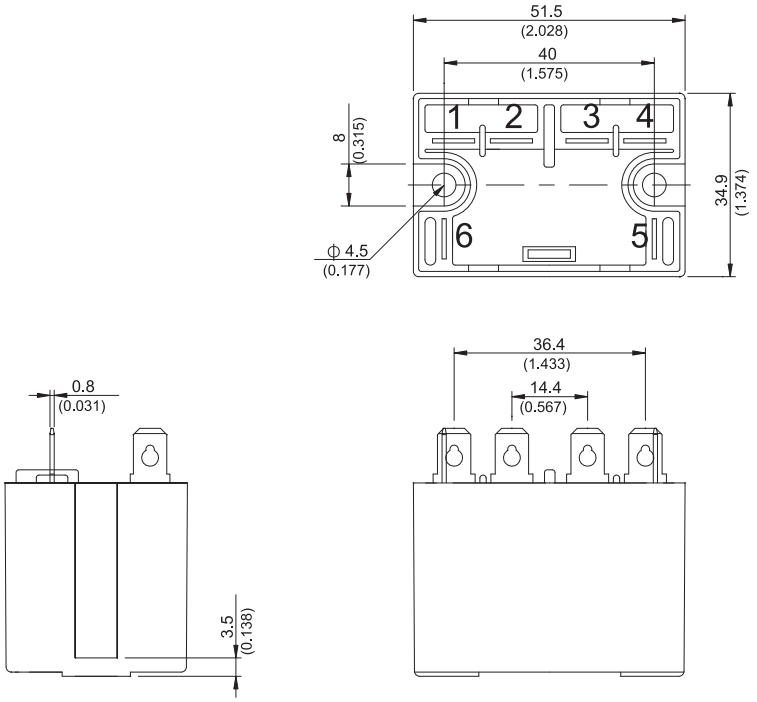

◆841-P-2A (C,D,V,S)

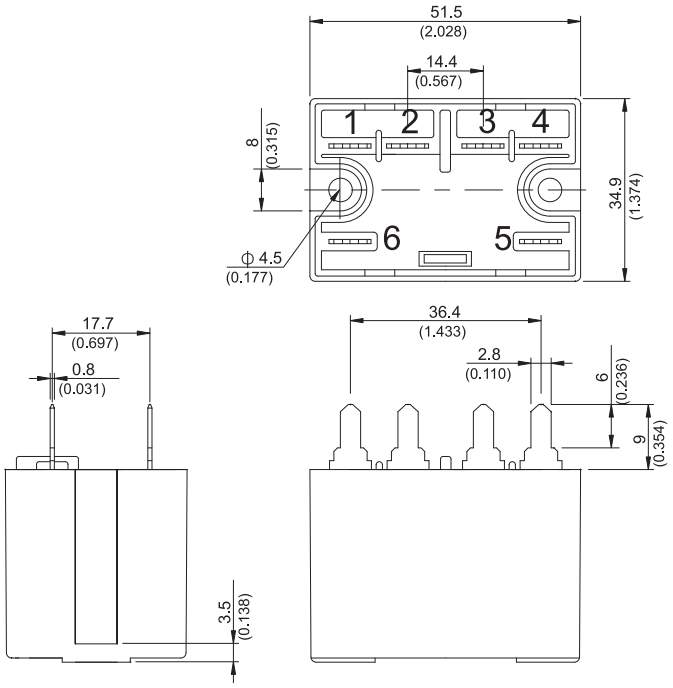

◆841-S-1A (C,D,V,S)

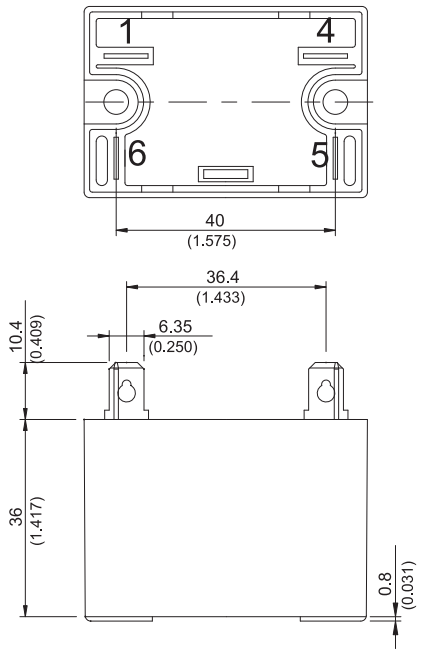

◆841-P-1A (C,D,V,S)

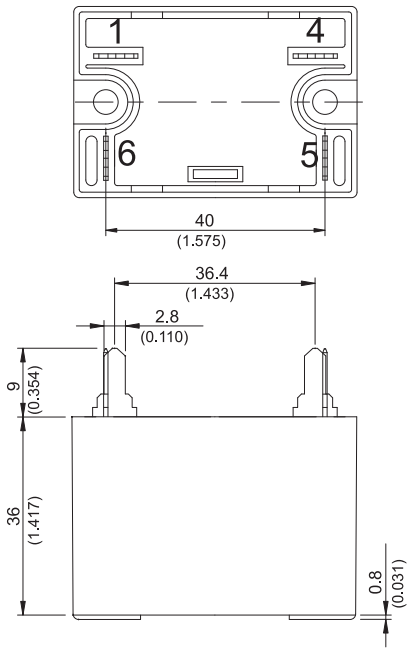

841

◆841-S-1A (C1,D1,S1)

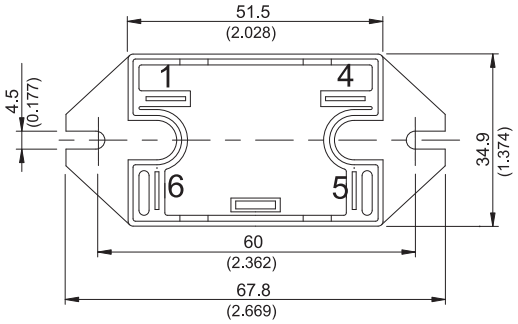

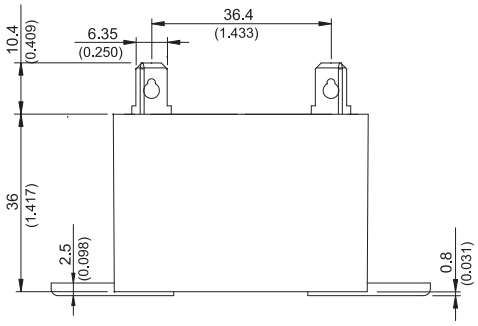

◆841-S-2A (C1,D1,S1)

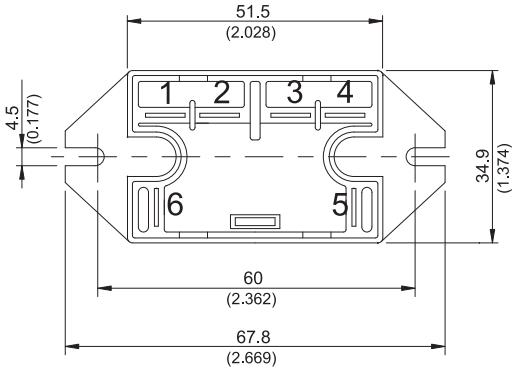

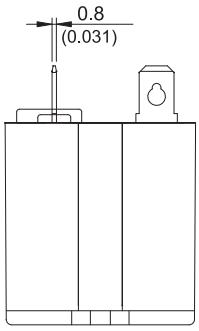

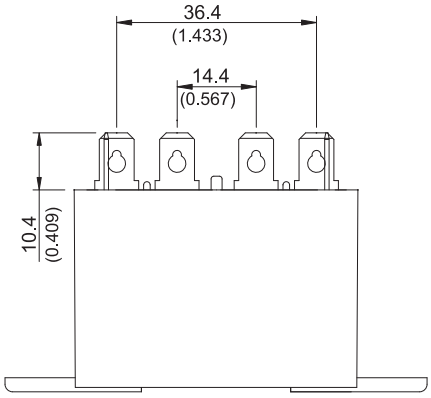

Wiring Diagram

BOTTOM VIEW

2A

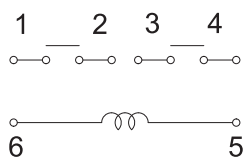

1A

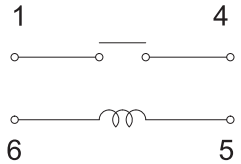

Mounting Holes

BOTTOM VIEW

◆841-S

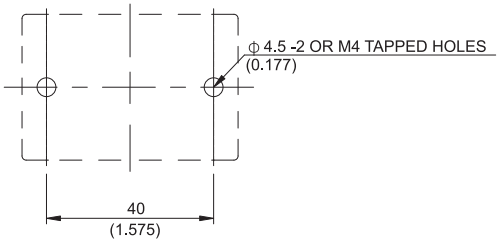

◆841-S (C1,D1,S1)

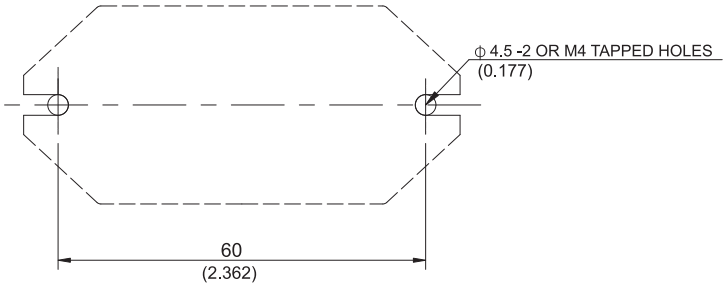

PC Board Layout

BOTTOM VIEW

◆841-P

2A

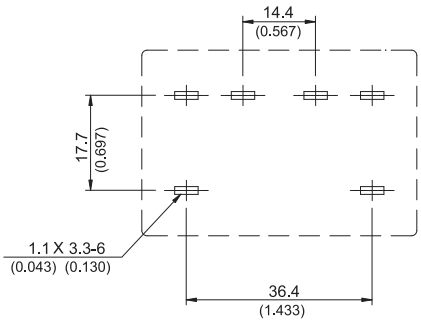

1A

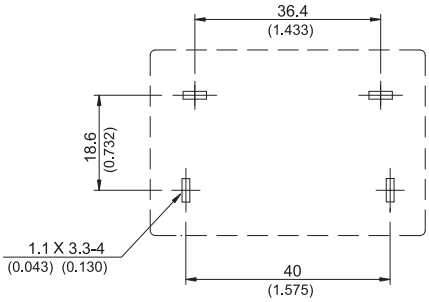

841

Engineering Data

Life expectance (1P)

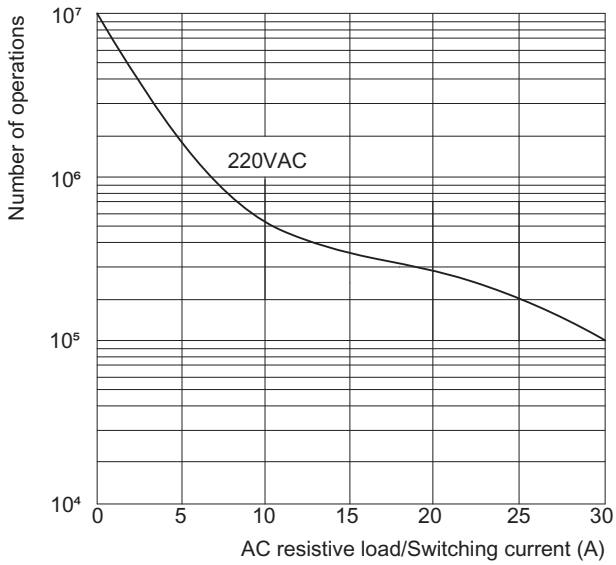

Life expectance (2P)

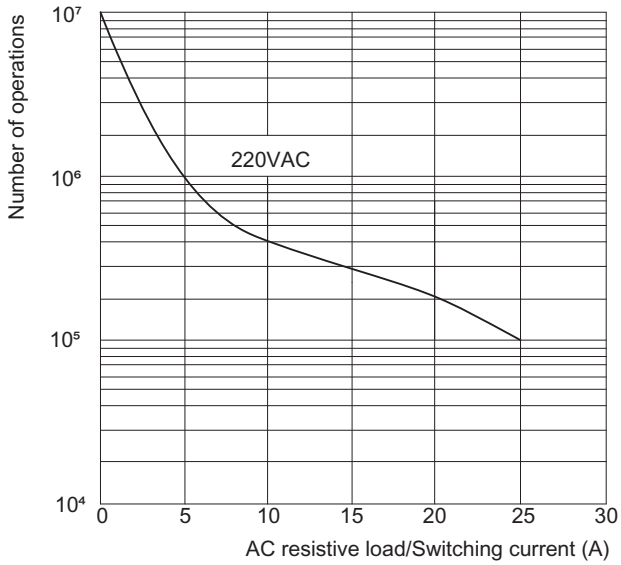

Coil operating range DC

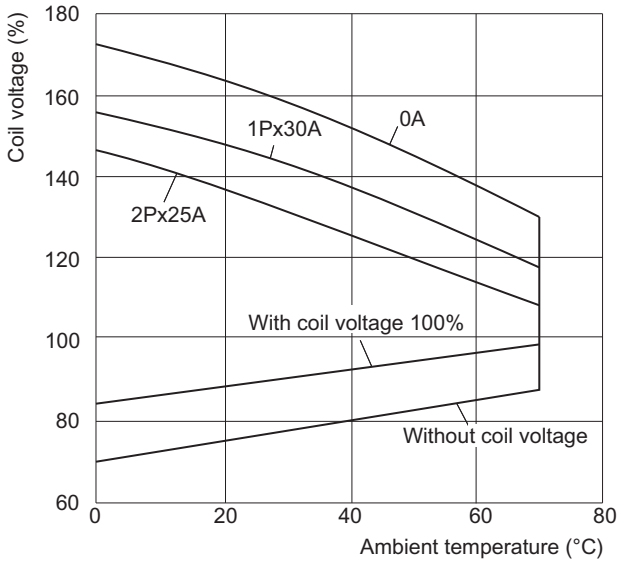

Coil operating range AC

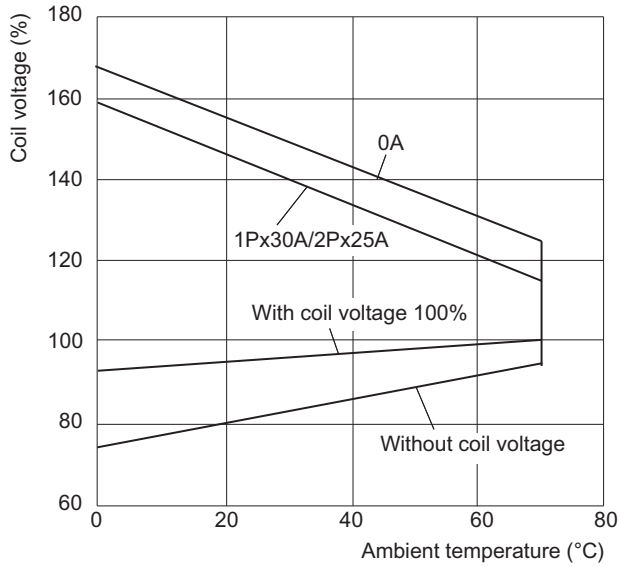
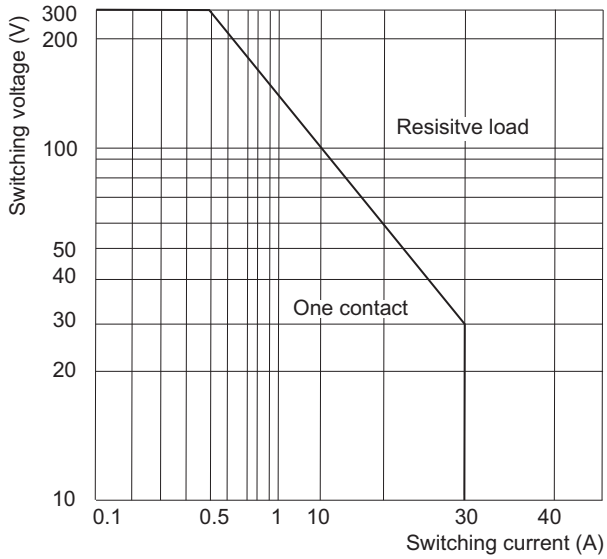
Max. DC load breaking capacity