THIS DRAWING IS UNPUBLISHED. RELEASED FOR PUBLICATION 27-02-02 ,- .
© COPYRIGHT 2002 BY TYCO ELECTRONICS CORPORATION. ALL RIGHTS RESERVED.

LOC	DIST
E	B

REVISIONS

P	LTR	DESCRIPTION	DATE	DWN	APVD
	D	EBD0-0215-04	22-06-04	AM	FWK
	E	EBD0-0435-04	19-11-04	AM	FWK
	F	ECR-05-012541	06/10/05	AM	FWK

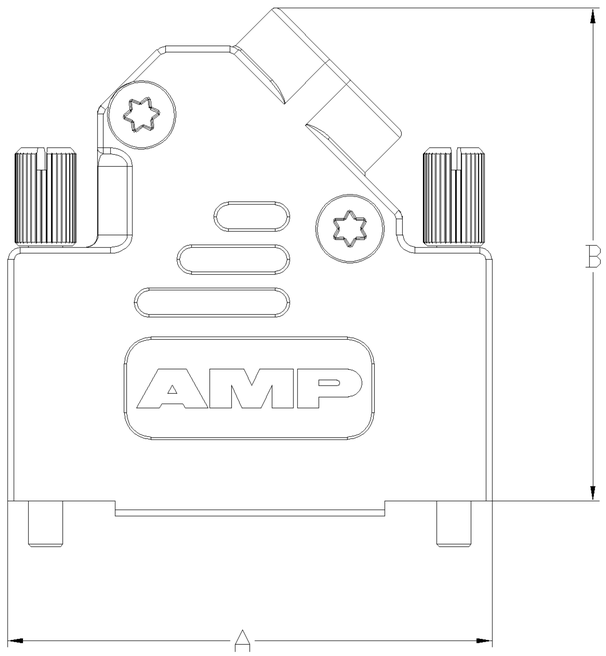

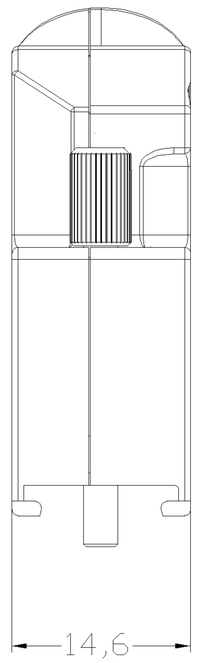

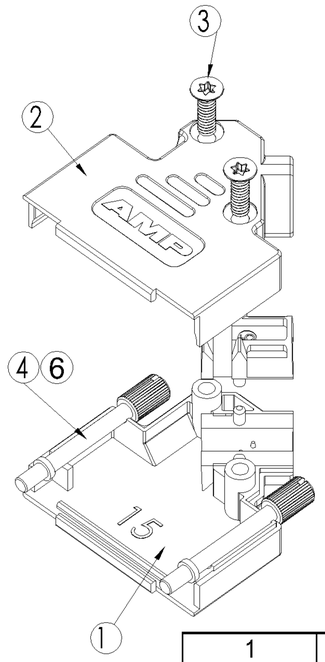

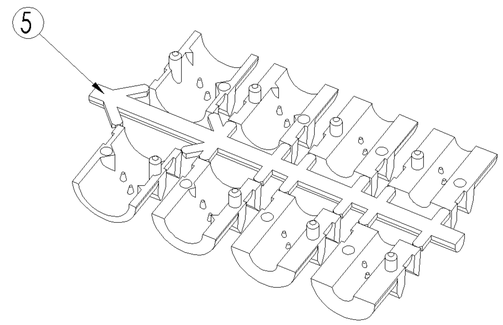

1	METAL BACKSHELL 37 WAY TOP ENTRY	5-1478763-4
1	METAL BACKSHELL 25 WAY TOP ENTRY	5-1478763-3
1	METAL BACKSHELL 15 WAY TOP ENTRY	5-1478763-2
1	METAL BACKSHELL 9 WAY TOP ENTRY	5-1478763-1
KITS/BAG		
100	METAL BACKSHELL 37 WAY TOP ENTRY	4-1478763-8
100	METAL BACKSHELL 25 WAY TOP ENTRY	4-1478763-7
100	METAL BACKSHELL 15 WAY TOP ENTRY	4-1478763-6
100	METAL BACKSHELL 9 WAY TOP ENTRY	4-1478763-5
100	METAL BACKSHELL 37 WAY TOP ENTRY	3-1478763-7
100	METAL BACKSHELL 25 WAY TOP ENTRY	2-1478763-5
100	METAL BACKSHELL 15 WAY TOP ENTRY	1-1478763-5
100	METAL BACKSHELL 9 WAY TOP ENTRY	0-1478763-9
COMPONENTS /BAG	DESCRIPTION	PART NUMBER

				BACKSHELL BOTTOM	BACKSHELL TOP	FIXING SCREW TYPE - TORQUE DRIVE	JACKSCREW M3	STRAIN RELIEF SET	JACKSCREW 4-40
4-1478763-8	69.7	40.2	QTY	1	1	2	2	1	-
4-1478763-7	53.2	40.2		1	1	2	2	1	-
4-1478763-6	39.5	40.2		1	1	2	2	1	-
4-1478763-5	31	36.2		1	1	2	1	1	-
5-1478763-4 and 3-1478763-7	69.7	40.2		1	1	2	-	1	2
5-1478763-3 and 2-1478763-5	53.2	40.2		1	1	2	-	1	2
5-1478763-2 and 1-1478763-5	39.5	40.2		1	1	2	-	1	2
5-1478763-1 and 0-1478763-9	31	36.2		1	1	2	-	1	1
PART NUMBER	A'	B'	ITEM	1'	2'	3'	4'	5'	6'

1. FOR ASSEMBLY DETAILS REFER TO LEAFLET 0-1478530-1.
1-PER BOX OF 100 PARTS

THIS DRAWING IS A CONTROLLED DOCUMENT.

DIMENSIONS: MM

TOLERANCES UNLESS OTHERWISE SPECIFIED:
0 PLC ± –
1 PLC ± –
2 PLC ± –
3 PLC ± –
4 PLC ± –
ANGLES ± –

MATERIAL –
FINISH –

DWN A.BEKEN 27-02-02
CHK R.G 27-02-02
APVD F W-KING 27-02-02
PRODUCT SPEC –
APPLICATION SPEC –
WEIGHT –

tyco Electronics
Tyco Electronics Corporation
Stanmore, Middlesex, HA7 4RS

NAME
ADK SERIES DIE-CAST BACKSHELL
45 DEGREE ENTRY
–

SIZE	CAGE CODE	DRAWING NO	RESTRICTED TO
A3	00779	C-1478763	–

CUSTOMER DRAWING | SCALE 1:1 | SHEET 1 OF 1 | REV F