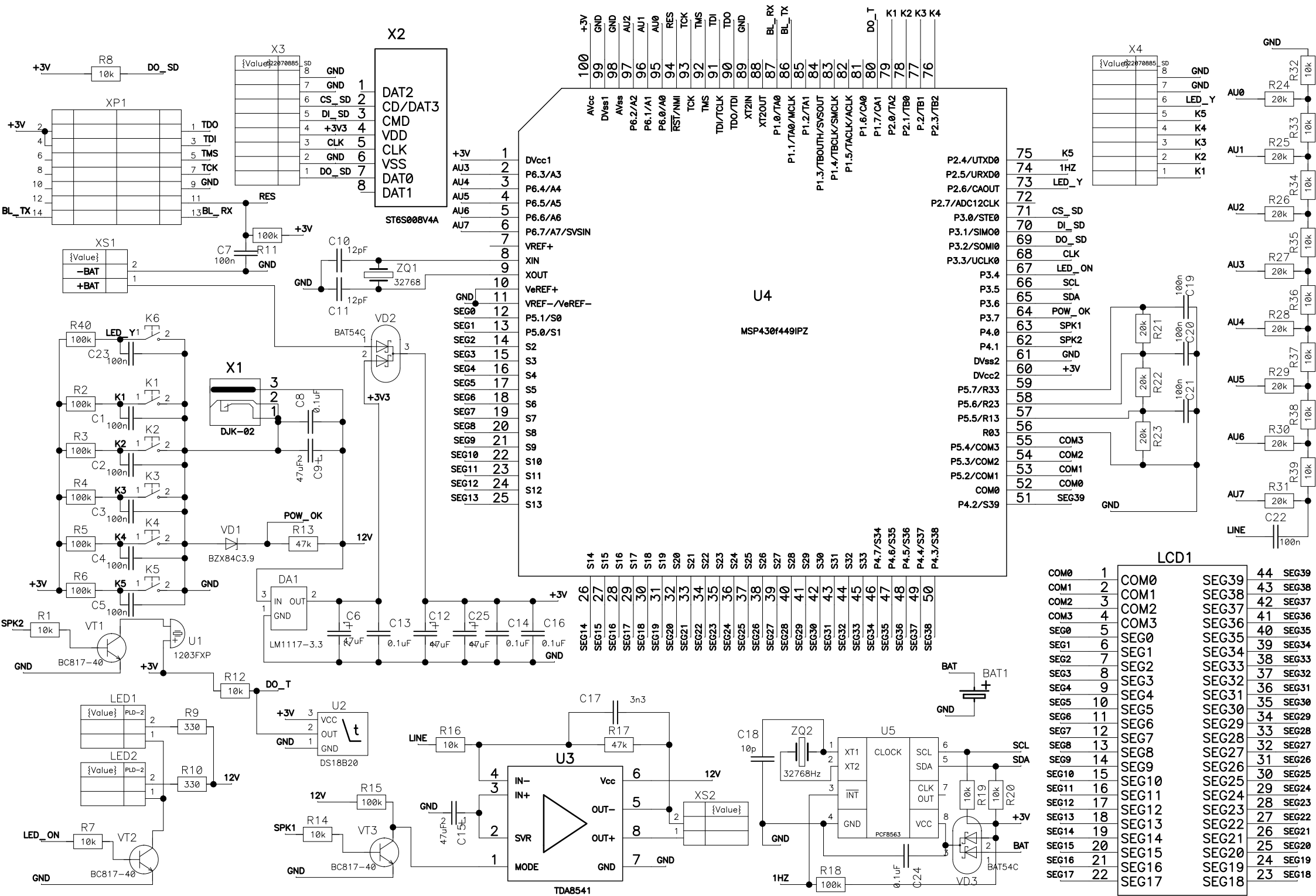
X2
DAT2
CD/DAT3
CMD
VDD
CLK
VSS
DAT0
DAT1
ST6S008V4A
X3
X4
XP1
XS1
X1
DJK-02
U4
MSP430f449IPZ
LCD1
U1
1203FXP
U2
DS18B20
U3
TDA8541
U5
PCF8563
BAT1
VT1
BC817-40
VT2
BC817-40
VT3
BC817-40
VD1
BZX84C3.9
VD2
BAT54C
VD3
BAT54C
DA1
LM1117-3.3
LED1
LED2
ZQ1
32768
ZQ2
32768Hz
XS2