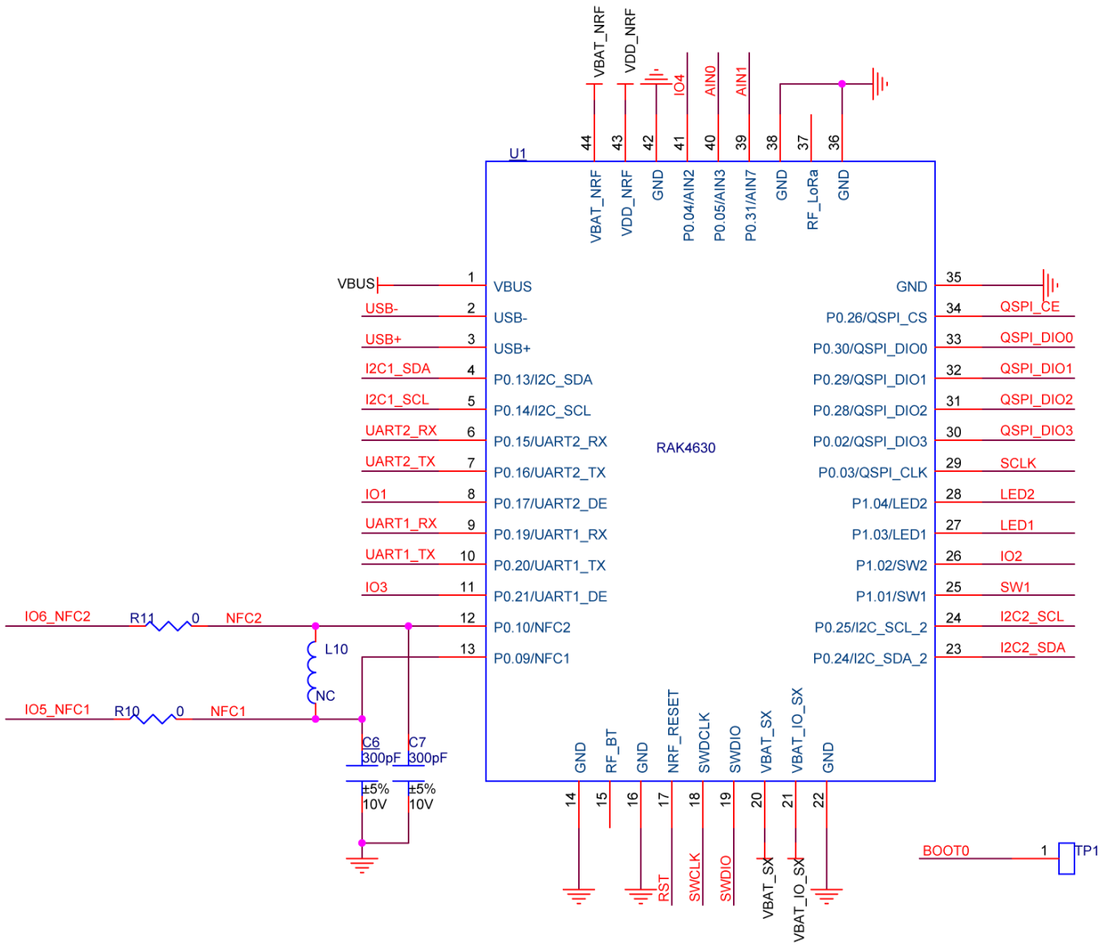

RAK4630 Module

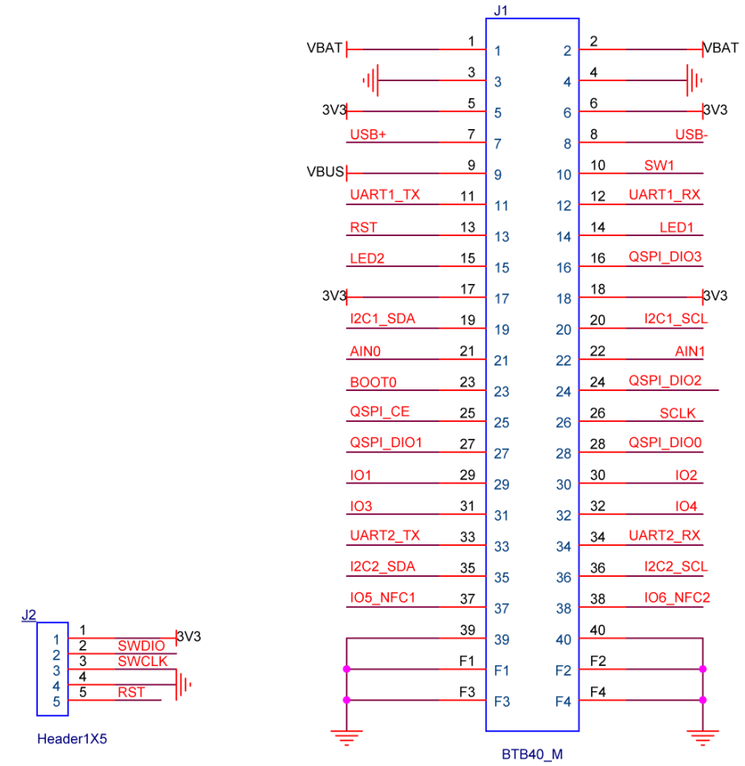

Connector

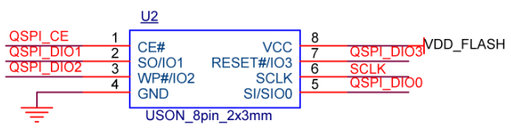

SPI Flash

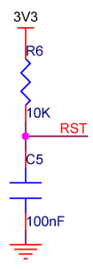

RESET

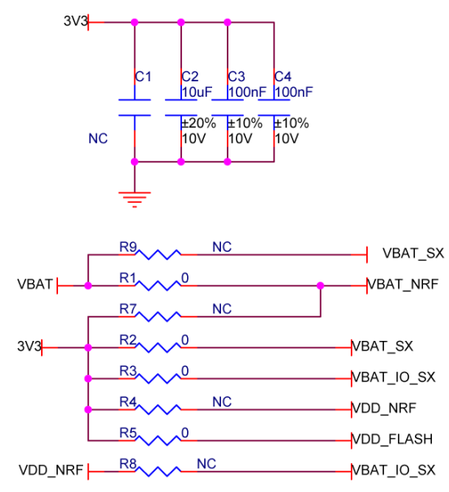

Power

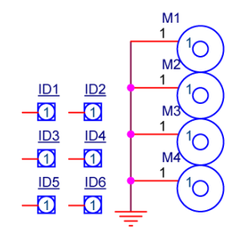

Mechanical

<Core Design>		
Title		
Size A3	Document Number <Doc>	Rev 2.0
Date: Friday, August 21, 2020	Sheet 2 of 2	