UM1050
User manual

STM32W-RFCKIT RF control kit for STM32W108xx microcontrollers

Introduction

The STM32W-RFCKIT low-cost RF control kit is an easy-to-use tool for STM32W108xx RF microcontrollers. This family of microcontrollers integrates a 32-bit ARM® Cortex™-M3 microprocessor and a 2.4 GHz, IEEE 802.15.4-compliant transceiver. The kit demonstrates plug and play 2.4 GHz RF point-to-point communications targeting general-purpose wireless control systems.

The STM32W-RFCKIT RF control kit provides demonstration applications and documentation which serve as a reference for creating your own applications and re-programming the STM32W108xx microcontroller.

You can run the STM32W-RFCKIT RF control kit in several ways using the dedicated software libraries (Simplified MAC and ZigBee RF4CE). This kit provides access to a set of straightforward APIs enabling application engineers to easily develop RF control capabilities such as LEDs, serial communication channels (virtual COM through USB), MEM enabled pointers, etc. Moreover, thanks to the flexibility of STM32W microcontrollers, developers will also be able to use the kit with other available protocol network libraries: MAC based, RF4CE.

This manual provides information about:

- STM32W-RFCKIT RF control kit components
- How to install the related hardware and software trees

Note: *For more information, visit the STM32W 32-bit RF microcontroller webpages at www.st.com/stm32w_rfcontrol.*

These webpages provide full access to all STM32W108xx resources (kits, software packages and documents).

Table 1 lists the evaluation tool concerned by this user manual.

Table 1. Applicable tools

Type	Applicable products
Evaluation tool	STM32W-RFCKIT RF control kit

Contents

1 Getting started 6

1.1 Kit description 6

1.1.1 Hardware 6

1.2 STM32W108xx RF low cost kit board revision numbers 7

1.3 MB950 + MB953 hardware description 7

1.3.1 MB950 + MB953 resources 7

1.3.2 MB950 + MB953 connectors 7

1.3.3 MB950 + MB953 connectors: P1 pins 8

1.3.4 MB950 + MB953 jumper configuration 8

1.3.5 MB950 + MB953 PC interface chip 8

1.3.6 MB950 + MB953 battery holder 8

1.4 MB951 hardware description 8

1.4.1 MB951 resources 8

1.4.2 MB951 connectors 9

1.4.3 MB951 jumper configuration 9

1.4.4 MB951 PC interface chip 9

1.4.5 MB951 battery holder 9

1.5 Software 9

1.6 Documentation 9

1.7 Software libraries and demonstration applications 9

1.8 Kit setup 10

1.8.1 Powering on the boards 10

1.8.2 Installing the ST Virtual COM port driver USB drive 10

1.8.3 Setting up the application serial communication channel 10

2 Running the STM32W-RFCKIT RF control kit 11

2.1 Installing the STM32W-RFCKIT RF control kit software tree 11

2.1.1 Building and downloading the Simple MAC talk demonstration application 11

2.1.2 Basic RF communication using the talk demonstration application 12

3 STM32W-RFCKIT utilities and software tools 13

3.1 stm32w_flasher utility 13

4 List of acronyms 14

Appendix A Available board schematics 15

Revision history 20

List of tables

Table 1. Applicable tools . . . 1
Table 2. Kit board revision numbers . . . 7
Table 3. MB950 + MB953 resources . . . 7
Table 4. MB950 + MB953 connectors . . . 7
Table 5. MB950 + MB953 connectors: P1 pins . . . 8
Table 6. MB950 + MB953 PC interface chip . . . 8
Table 7. MB950 + MB953 battery holder . . . 8
Table 8. MB951 resources . . . 8
Table 9. MB951 connectors . . . 9
Table 10. MB951 PC interface chip . . . 9
Table 11. Supported talk RF control scenarios through application board buttons . . . 12
Table 12. List of acronyms . . . 14
Table 13. Document revision history . . . 20

List of figures

Figure 1. MB950 RF-mote board 6
Figure 2. MB951 USB dongle 6
Figure 3. MB953 rev. A 15
Figure 4. MB953 rev. B 16
Figure 5. MB950 RF-mote board 17
Figure 6. MB951 rev. A 18
Figure 7. MB951 rev. B 19

1 Getting started

This section provides a complete description of the STM32W-RFCKIT RF control kit's hardware and software.

The STM32W-RFCKIT RF control kit order code is:

- STM32WC-RFCKIT

Note: Order code STM32W-RFCKIT is obsolete and replaced by STM32WC-RFCKIT.

1.1 Kit description

1.1.1 Hardware

The STM32W-RFCKIT RF control kit's package contains the following hardware components:

- One STM32W108xx MB950 RF-mote board
- One STM32W108xx MB951 USB dongle

Figure 1. MB950 RF-mote board

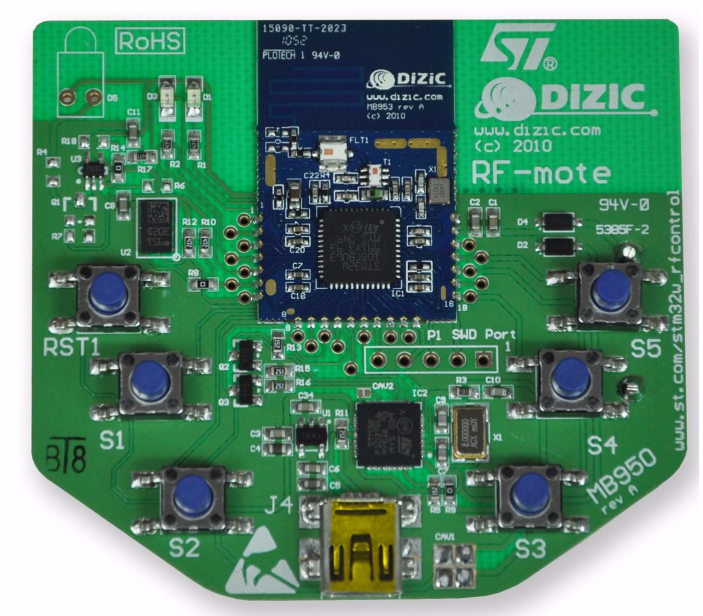

Figure 2. MB951 USB dongle

Note: The MB950 RF-mote board contains the STM32W108 MB953 module on top of it.

1.2 STM32W108xx RF low cost kit board revision numbers

Table 2 details the STM32W108xx RF low cost kit board revision numbers versus those of the STM32W108xx:

Table 2. Kit board revision numbers

	STM32W108xB (128K Flash)	STM32W108CC (256K Flash)
MB950	Revision A	Revision A
MB953	Revision A	Revision B
MB951	Revision A	Revision B

1.3 MB950 + MB953 hardware description

1.3.1 MB950 + MB953 resources

Table 3 lists the resources available in the MB950 + MB953 board to develop applications, and their connections with STM32W108 pins.

Table 3. MB950 + MB953 resources

Type	Label	Part	MB953 STM32W108 pin (Rev. A,B)
Button	RST1		nRST
Button	S1		PB3
Button	S2		PA7
Button	S3		PB7
Button	S4		PB0
Button	S5		PB6
LED	D1		PA5
LED	D3		PA0
LED	D5	Infrared LED (not fitted)	PB4
Mems	U2	LIS302	PA1, PA2
Temperature Sensor	U3	STLM20	PA4

1.3.2 MB950 + MB953 connectors

Table 4 lists the connectors available in the MB950 + MB953 board and their functions.

Table 4. MB950 + MB953 connectors

Type	Label	Function
Mini USB	J4	PC I/O
Debug Connector	P1	SWD debug

1.3.3 MB950 + MB953 connectors: P1 pins

Table 5. MB950 + MB953 connectors: P1 pins

Name	GPIO/Function
1	GND
2	+VBRD
3	nRST
4	SWDIO/JTMS
5	SWCLK/JTCK

1.3.4 MB950 + MB953 jumper configuration

None

1.3.5 MB950 + MB953 PC interface chip

Table 6 lists the PC interface chip available in the MB950 + MB953 board to allow I/O interface to the STM32W108.

Table 6. MB950 + MB953 PC interface chip

Type	Part
PC I/O interface	STM32F103TBU6

1.3.6 MB950 + MB953 battery holder

Table 7. MB950 + MB953 battery holder

Type	Part
2x AAA battery holder	BT1

1.4 MB951 hardware description

1.4.1 MB951 resources

Table 8 lists the resources available in the MB951 board to develop applications and their connection with STM32W108 pins.

Table 8. MB951 resources

Type	Label	Part	STM32W108 pin (Rev. A, B)
Button	S1		A3
LED	D1		PA5
LED	D3		PA0

1.4.2 MB951 connectors

Table 9 lists the connectors available in the MB951 board and their functions.

Table 9. MB951 connectors

Type	Label	Function
USB	P1	PC I/O

1.4.3 MB951 jumper configuration

None

1.4.4 MB951 PC interface chip

Table 10 lists the PC interface chip available in the MB951 board to allow I/O interface to the STM32W108.

Table 10. MB951 PC interface chip

Type	Part
PC I/O interface	STM32F103TBU6

1.4.5 MB951 battery holder

None

1.5 Software

The STM32W-RFCKIT RF control kit does not contain any CD-ROMs.

1.6 Documentation

The STM32W-RFCKIT RF control kit contains a welcome letter which briefly describes its components and targeted applications.

1.7 Software libraries and demonstration applications

The STM32W-RFCKIT RF control kit boards support the following RF software library packages:

- ST ZigBee RF4CE software library and ZRC, ZID application profiles with demonstration applications for controlling an RF4CE-compliant TV using an RF4CE-compliant remote control and an RF4CE mouse, keyboard, ...
- ST SimpleMAC software library and demonstration applications targeting point-to-point communication scenarios based on the IEEE 802.15.4 protocol.

For a detailed description of each software package, refer to the related documentation.

Note: Please check for the most recent RF library package versions on the STM32W 32-bit RF MCU Internet webpages at www.st.com/stm32w_rfcontrol.

1.8 Kit setup

1.8.1 Powering on the boards

The MB950 RF-mote board can be powered as follows:

- Via batteries
- Via USB

To power on the MB951 USB dongle, simply plug it into a PC USB port.

1.8.2 Installing the ST Virtual COM port driver USB drive

To use the serial communication channel on the kit application boards, a Virtual COM port driver for STM32F103xx must be installed. This driver is provided within each RF software library package.

1.8.3 Setting up the application serial communication channel

To set up a serial communication channel for the kit application boards, follow these steps:

1. On the MB950 RF-mote board, connect a mini-USB cable between the board's mini-USB connector and a PC USB port.
2. Plug the MB951 USB dongle into a PC USB port.
3. Using the mouse, right-click on **My Computer**, select **Manage**, **Device Manager**, and open **Ports (COM & LPT)** to display the related USB COMx ports.
4. Open a Hyper Terminal on the corresponding USB virtual COMx ports with the following configuration:
   - Bit rate: 115200
   - Data bits: 8
   - Parity: None
   - Stop bits: 1
   - Flow control: None

2 Running the STM32W-RFCKIT RF control kit

In the STM32W-RFCKIT RF control kit, the Simple MAC talk application is preprogrammed on both kit boards.

The Simple MAC talk demonstration application is a simple application that demonstrates point-to-point IEEE 802.15.4 wireless communications using the STM32W108xx MCU.

It allows basic RF control of the USB dongle LEDs by pushing the application board's buttons. Further, it can be used as a wireless RS-232 cable replacement. For example, all data received on the serial port will be sent wirelessly to the other board and all the data received wirelessly will be sent to the serial port.

2.1 Installing the STM32W-RFCKIT RF control kit software tree

To install the specific kit software tree, download the related RF software library package from the STM32W 32-bit RF microcontroller webpages, then start the installation process on your destination folder.

2.1.1 Building and downloading the Simple MAC talk demonstration application

The Simple MAC talk demonstration application runs on all STM32W-RFCKIT RF control kit boards.

Using the talk IAR project

An IAR workspace is also provided for building the Simple MAC talk demonstration application.

Follow these steps to build the talk demonstration application image:

1. Open the IAR toolset.
2. From the **File**, **Open**, **Workspace** menu, open the **talk.eww** IAR project and select the chosen configuration.
3. From the **Project** menu, select **Rebuild All**. A binary file is built in the specific demonstration application directory under the selected installation path.

2.1.2 Basic RF communication using the talk demonstration application

Once the talk application has been loaded on the kit's board, different RF communication scenarios can be targeted as described in *Table 11*.

Table 11. Supported talk RF control scenarios through application board buttons

Application board	USB dongle
Press button S1	LED D1 toggles
Press button S2	LED D3 toggles
Press button S3	Both LEDs D1 and D3 toggle
Press button S4	LED D1 blinks for a few seconds
Press button S5	LED D3 blinks for a few seconds

Note: 1 When pressing a button on the application board, LED D1 is turned on, indicating that a packet is going to be sent.

2 When pressing a button on the application board, if something is wrong with the current RF communication (packet transmission failed or no acknowledgment received from the USB dongle), the application board LEDs D1 and D3 start blinking for a few seconds.

For setting a “chat communication”, it is requested to set up a serial communication channel on both kit boards by following the steps described in *Section 1.8.3: Setting up the application serial communication channel*.

Once the serial communication channels of the kit boards are correctly configured, the two talk demonstration applications can communicate by typing the “chat text” on the corresponding Hyper Terminal.

The above example application shows how an RS-232 cable connection between two devices can be replaced with a wireless system using STM32W108xx microcontrollers.

3 STM32W-RFCKIT utilities and software tools

3.1 stm32w_flasher utility

The stm32w_flasher utility allows you to download a binary file into the STM32W-RFCKIT RF control kit boards. This utility comes with the Simple MAC software installer file.

To download a binary image, follow these steps:

1. Connect the kit board to a PC USB port.
2. Using the mouse, right-click on **My Computer**, select **Manage**, **Device Manager**, and open **Ports (COM & LPT)** to display the related USB COMx port.
3. Open a DOS Window on your PC and go to the utilities folder which is created after the installation process.
4. Type the following command:

   ```
   stm32w_flasher -p <COMx> -r -f <file_name.bin/.s37>
   ```

   where COMx is the virtual COM related to the connected application board, and *file_name.bin/.s37* is the application image to be downloaded.

4 List of acronyms

Table 12. List of acronyms

Term	Meaning
API	Application programming interfaces
ZRC	ZigBee remote control
ZID	ZigBee input device
IDE	Integrated development tool
MAC	Media access control
RC	Remote control
RF	Radio frequency communication
USB	Universal serial bus

Appendix A Available board schematics

Figure 3. MB953 rev. A

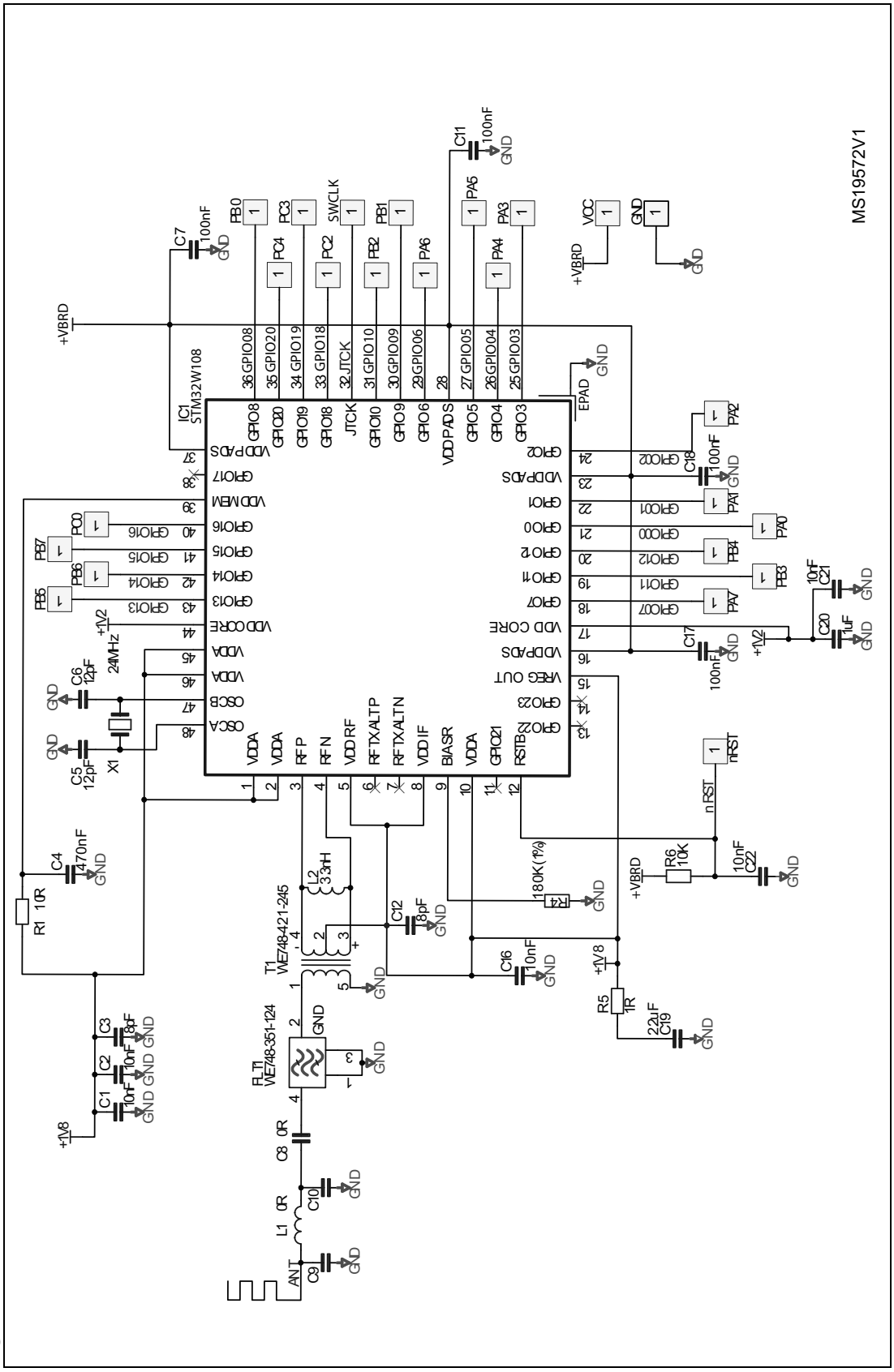

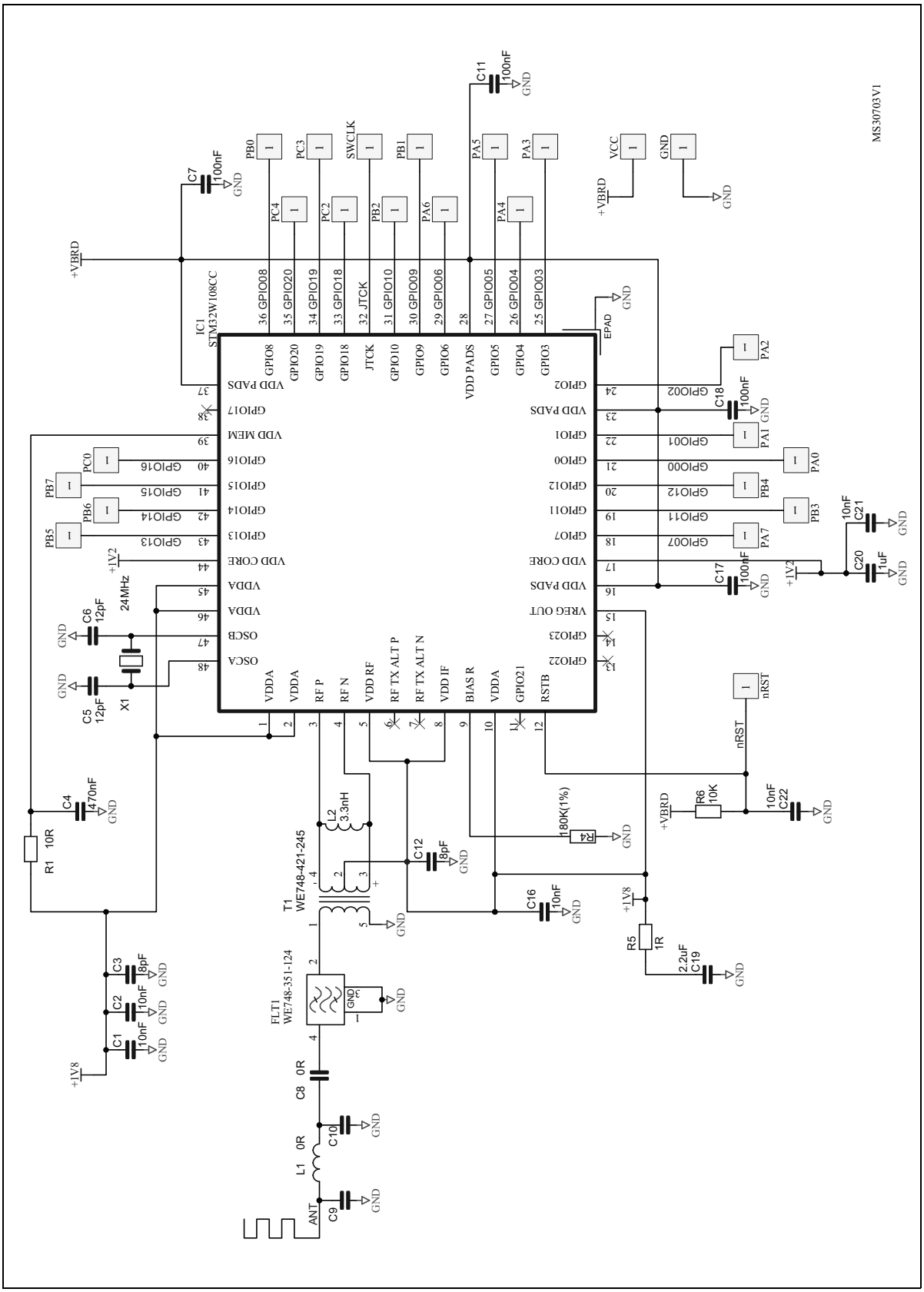

Figure 4. MB953 rev. B

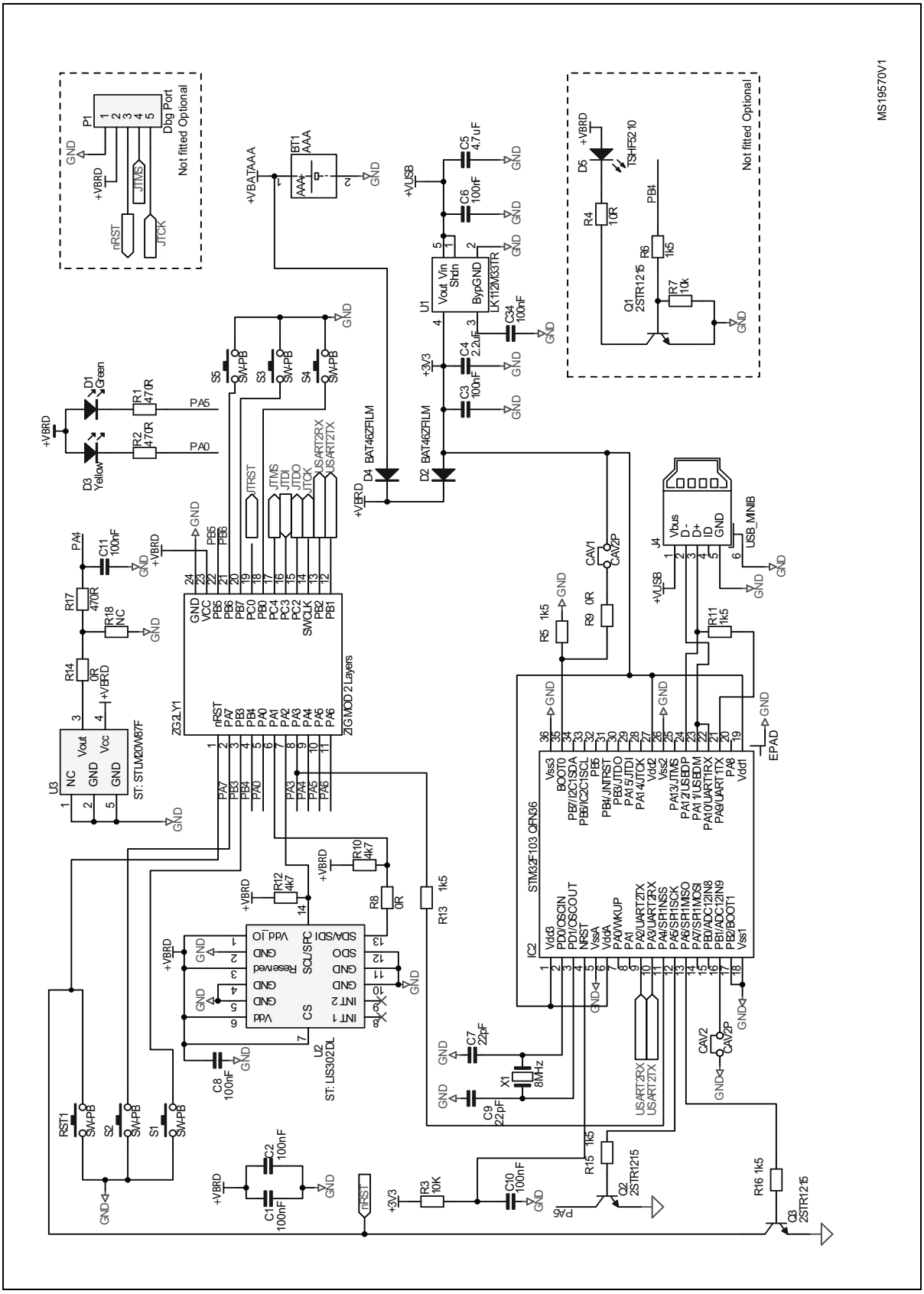

Figure 5. MB950 RF-mote board

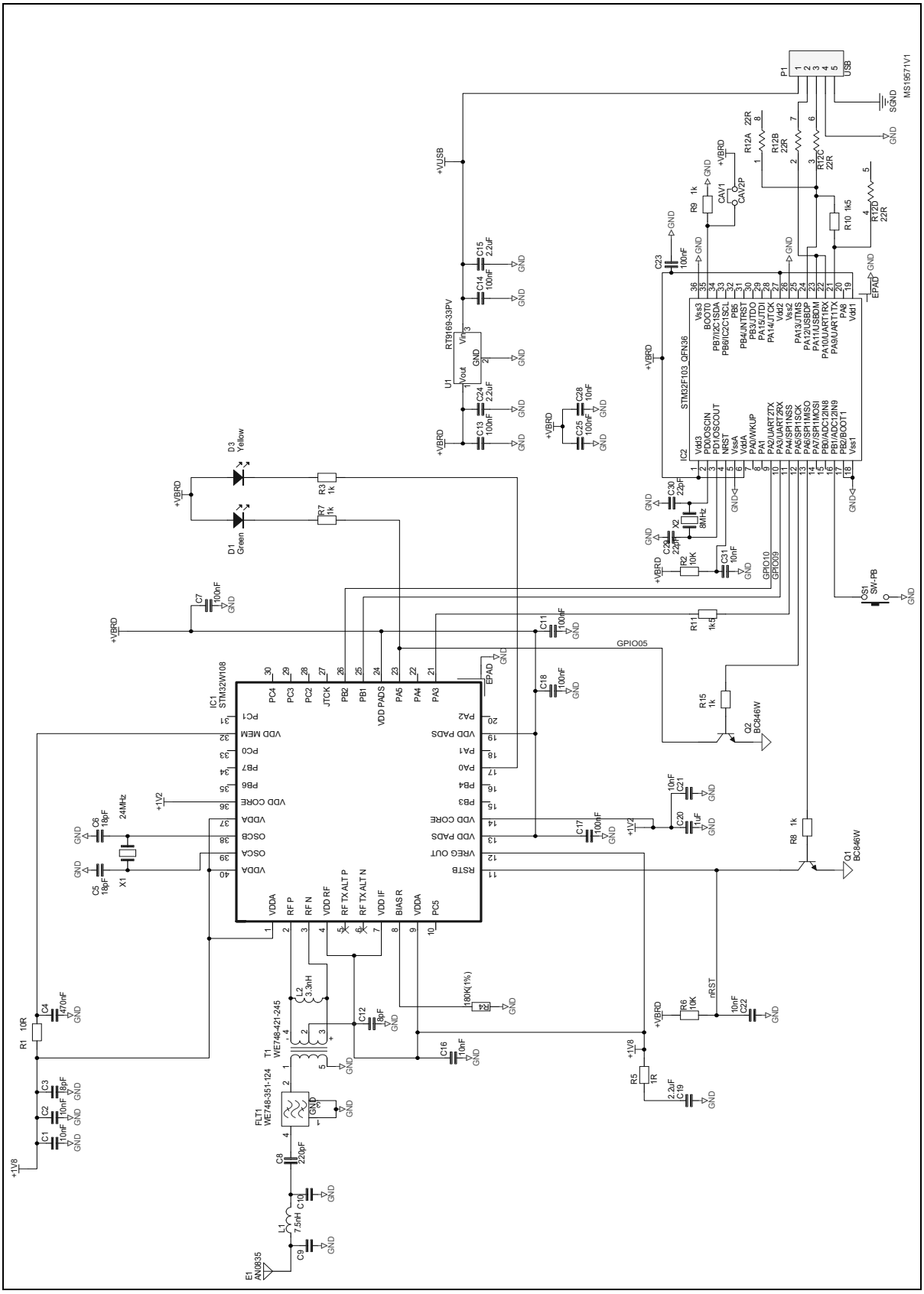

Figure 6. MB951 rev. A

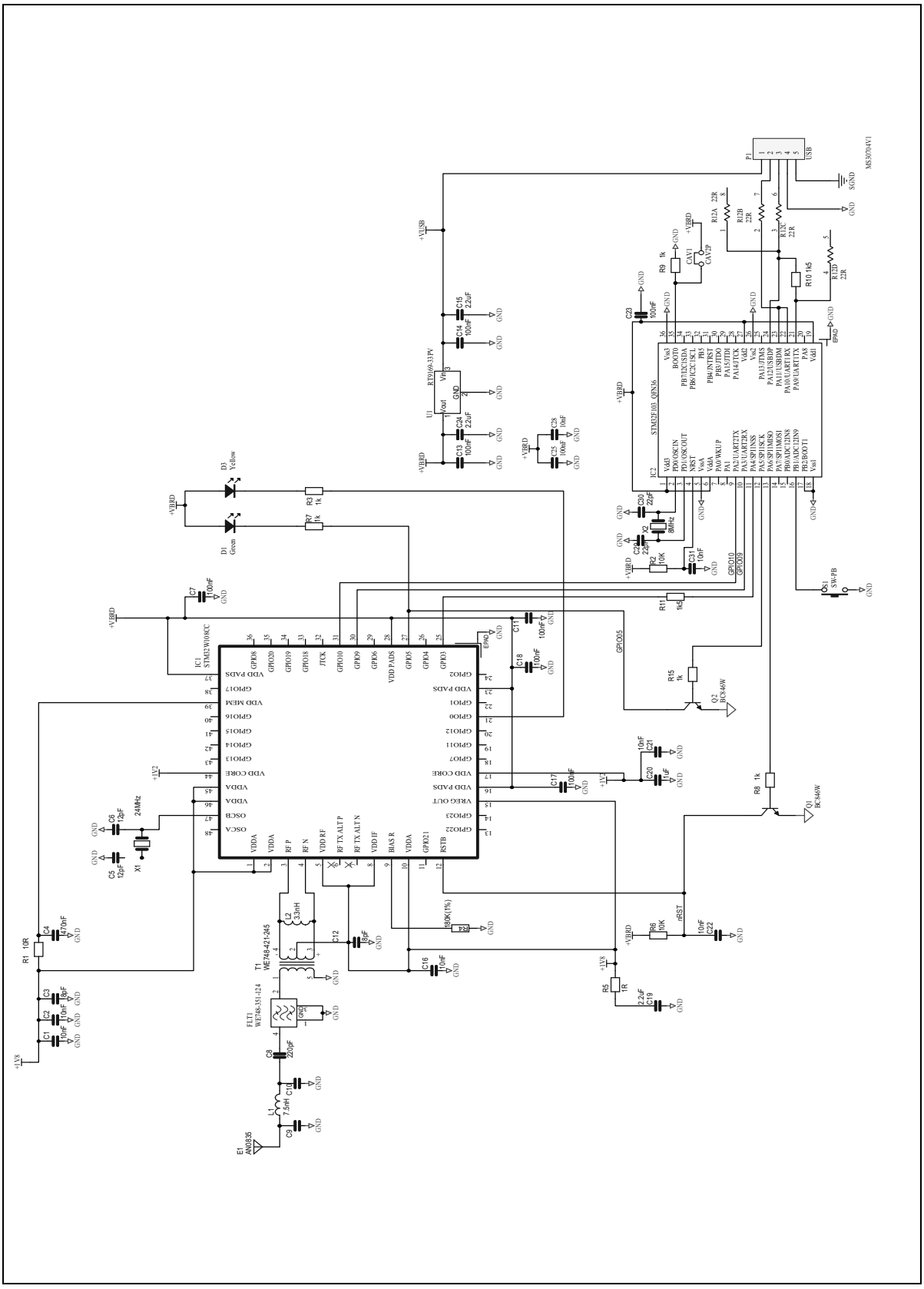

Figure 7. MB951 rev. B

Revision history

Table 13. Document revision history

Date	Revision	Changes
14-Feb-2011	1	Initial release.
21-Jun-2011	2	Added *Section 1.3: MB950 + MB953 hardware description*, *Section 1.4: MB951 hardware description* and *Section Appendix A: Available board schematics*.
11-Jun-2012	3	Removed reference to EmberZnet 4.3.0 ZigBee PRO package.
03-Sep-2012	4	Added reference to new order code STM32WC-RFCKIT. Added *Figure 4: MB953 rev. B* and *Figure 7: MB951 rev. B* board schematics.

Please Read Carefully:

Information in this document is provided solely in connection with ST products. STMicroelectronics NV and its subsidiaries (“ST”) reserve the right to make changes, corrections, modifications or improvements, to this document, and the products and services described herein at any time, without notice.

All ST products are sold pursuant to ST’s terms and conditions of sale.

Purchasers are solely responsible for the choice, selection and use of the ST products and services described herein, and ST assumes no liability whatsoever relating to the choice, selection or use of the ST products and services described herein.

No license, express or implied, by estoppel or otherwise, to any intellectual property rights is granted under this document. If any part of this document refers to any third party products or services it shall not be deemed a license grant by ST for the use of such third party products or services, or any intellectual property contained therein or considered as a warranty covering the use in any manner whatsoever of such third party products or services or any intellectual property contained therein.

UNLESS OTHERWISE SET FORTH IN ST’S TERMS AND CONDITIONS OF SALE ST DISCLAIMS ANY EXPRESS OR IMPLIED WARRANTY WITH RESPECT TO THE USE AND/OR SALE OF ST PRODUCTS INCLUDING WITHOUT LIMITATION IMPLIED WARRANTIES OF MERCHANTABILITY, FITNESS FOR A PARTICULAR PURPOSE (AND THEIR EQUIVALENTS UNDER THE LAWS OF ANY JURISDICTION), OR INFRINGEMENT OF ANY PATENT, COPYRIGHT OR OTHER INTELLECTUAL PROPERTY RIGHT.

UNLESS EXPRESSLY APPROVED IN WRITING BY TWO AUTHORIZED ST REPRESENTATIVES, ST PRODUCTS ARE NOT RECOMMENDED, AUTHORIZED OR WARRANTED FOR USE IN MILITARY, AIR CRAFT, SPACE, LIFE SAVING, OR LIFE SUSTAINING APPLICATIONS, NOR IN PRODUCTS OR SYSTEMS WHERE FAILURE OR MALFUNCTION MAY RESULT IN PERSONAL INJURY, DEATH, OR SEVERE PROPERTY OR ENVIRONMENTAL DAMAGE. ST PRODUCTS WHICH ARE NOT SPECIFIED AS "AUTOMOTIVE GRADE" MAY ONLY BE USED IN AUTOMOTIVE APPLICATIONS AT USER’S OWN RISK.

Resale of ST products with provisions different from the statements and/or technical features set forth in this document shall immediately void any warranty granted by ST for the ST product or service described herein and shall not create or extend in any manner whatsoever, any liability of ST.

ST and the ST logo are trademarks or registered trademarks of ST in various countries.

Information in this document supersedes and replaces all information previously supplied.

The ST logo is a registered trademark of STMicroelectronics. All other names are the property of their respective owners.

© 2012 STMicroelectronics - All rights reserved

STMicroelectronics group of companies

Australia - Belgium - Brazil - Canada - China - Czech Republic - Finland - France - Germany - Hong Kong - India - Israel - Italy - Japan - Malaysia - Malta - Morocco - Philippines - Singapore - Spain - Sweden - Switzerland - United Kingdom - United States of America

www.st.com